FLEXLUX

Embrace your Space

Glow sofa

Retail price list

Glow sofa

FLEXLUX
Embrace your Space

2 seater

Shown combination: 2225

Specifications	
Size (WxDxH) cm	159 x 91 x 81
Number of collis	1
CBM collis	0.852768
Weight of collis	

Group	Price
1	€ 1.469,00
2	€ 1.639,00
3	€ 1.709,00
4	€ 1.839,00
Omaha	€ 1.949,00
Dakota	€ 2.009,00
Savoy	€ 2.349,00
Safari	€ 2.329,00
Nature	€ 2.479,00

2.5 seater

Shown combination: 2525

Specifications	
Size (WxDxH) cm	191 x 91 x 81
Number of collis	1
CBM collis	1.021216
Weight of collis	

Group	Price
1	€ 1.599,00
2	€ 1.789,00
3	€ 1.859,00
4	€ 2.009,00
Omaha	€ 2.139,00
Dakota	€ 2.209,00
Savoy	€ 2.609,00
Safari	€ 2.579,00
Nature	€ 2.749,00

3 seater

Shown combination: 3225

Specifications	
Size (WxDxH) cm	224 x 91 x 81
Number of collis	1
CBM collis	1.194928
Weight of collis	

Group	Price
1	€ 1.749,00
2	€ 1.979,00
3	€ 2.089,00
4	€ 2.259,00
Omaha	€ 2.369,00
Dakota	€ 2.449,00
Savoy	€ 2.909,00
Safari	€ 2.879,00
Nature	€ 3.079,00

Footrest

Shown combination: 1740

Specifications	
Size (WxDxH) cm	
Number of collis	0
CBM collis	0
Weight of collis	

Group	Price
1	€ 539,00
2	€ 579,00
3	€ 599,00
4	€ 639,00
Omaha	€ 659,00
Dakota	€ 679,00
Savoy	€ 779,00
Safari	€ 769,00
Nature	€ 809,00

Prices in €

Glow sofa

FLEXLUX
Embrace your Space

2 seater + Chaiselong

Shown combination: 0015
Mirrored combination: 0025

Specifications	
Size (WxDxH) cm	241 x 158 x 81
Number of collis	2
CBM collis	1.673532
Weight of collis	

Group	Price
1	€ 2.359,00
2	€ 2.599,00
3	€ 2.709,00
4	€ 2.899,00
Omaha	€ 3.059,00
Dakota	€ 3.169,00
Savoy	€ 3.749,00
Safari	€ 3.719,00
Nature	€ 3.949,00

2.5 seater + Chaiselong

Shown combination: 0035
Mirrored combination: 0045

Specifications	
Size (WxDxH) cm	273 x 158 x 81
Number of collis	2
CBM collis	1.84198
Weight of collis	

Group	Price
1	€ 2.479,00
2	€ 2.759,00
3	€ 2.869,00
4	€ 3.089,00
Omaha	€ 3.259,00
Dakota	€ 3.379,00
Savoy	€ 4.019,00
Safari	€ 3.979,00
Nature	€ 4.239,00

3 seater + Chaiselong

Shown combination: 0075
Mirrored combination: 0085

Specifications	
Size (WxDxH) cm	305 x 158 x 81
Number of collis	2
CBM collis	2.015692
Weight of collis	

Group	Price
1	€ 2.639,00
2	€ 2.959,00
3	€ 3.089,00
4	€ 3.339,00
Omaha	€ 3.489,00
Dakota	€ 3.619,00
Savoy	€ 4.319,00
Safari	€ 4.269,00
Nature	€ 4.559,00

2 seater + Open end

Shown combination: 9105
Mirrored combination: 9115

Specifications	
Size (WxDxH) cm	236 x 224 x 81
Number of collis	3
CBM collis	1.98716
Weight of collis	

Group	Price
1	€ 2.759,00
2	€ 3.129,00
3	€ 3.289,00
4	€ 3.579,00
Omaha	€ 3.799,00
Dakota	€ 3.949,00
Savoy	€ 4.769,00
Safari	€ 4.719,00
Nature	€ 5.069,00

Prices in €

Glow sofa

FLEXLUX
Embrace your Space

2.5 seater + Open end

Shown combination: 9125
Mirrored combination: 9135

Specifications	
Size (WxDxH) cm	268 x 224 x 81
Number of collis	3
CBM collis	2.155608
Weight of collis	

Group	Price
1	€ 2.879,00
2	€ 3.289,00
3	€ 3.449,00
4	€ 3.769,00
Omaha	€ 3.999,00
Dakota	€ 4.159,00
Savoy	€ 5.029,00
Safari	€ 4.979,00
Nature	€ 5.349,00

3 seater + Open end

Shown combination: 9165
Mirrored combination: 9175

Specifications	
Size (WxDxH) cm	301 x 224 x 81
Number of collis	3
CBM collis	2.32932
Weight of collis	

Group	Price
1	€ 3.039,00
2	€ 3.479,00
3	€ 3.669,00
4	€ 4.019,00
Omaha	€ 4.239,00
Dakota	€ 4.399,00
Savoy	€ 5.329,00
Safari	€ 5.269,00
Nature	€ 5.669,00

2 seater + Open end + Chaiselong

Shown combination: 9185
Mirrored combination: 9195

Specifications	
Size (WxDxH) cm	318 x 224 x 81
Number of collis	4
CBM collis	2.807924
Weight of collis	

Group	Price
1	€ 3.599,00
2	€ 4.059,00
3	€ 4.249,00
4	€ 4.609,00
Omaha	€ 4.869,00
Dakota	€ 5.069,00
Savoy	€ 6.139,00
Safari	€ 6.059,00
Nature	€ 6.509,00

3 seater + Corner

Shown combination: 9245
Mirrored combination: 9255

Specifications	
Size (WxDxH) cm	322 x 257 x 81
Number of collis	3
CBM collis	2.389856
Weight of collis	

Group	Price
1	€ 3.619,00
2	€ 4.139,00
3	€ 4.369,00
4	€ 4.799,00
Omaha	€ 5.129,00
Dakota	€ 5.329,00
Savoy	€ 6.439,00
Safari	€ 6.369,00
Nature	€ 6.849,00

Prices in €

Glow sofa

2 seater + Chaiselong

Shown combination: 9285
Mirrored combination: 9295

Specifications

Size (WxDxH) cm	318 x 224 x 81
Number of collis	4
CBM collis	2.86846
Weight of collis	

Group	Price
1	€ 4.109,00
2	€ 4.659,00
3	€ 4.879,00
4	€ 5.319,00
Omaha	€ 5.669,00
Dakota	€ 5.889,00
Savoy	€ 7.109,00
Safari	€ 7.029,00
Nature	€ 7.539,00

Prices in €

Specifications of Glow

The Glow sofa is designed with beautiful soft lines and timeless aesthetics. Glow has a slender, luxurious and sophisticated design with a modern appeal. The Glow sofa is designed with the ultimate comfort in mind. The exclusive foam top gives the seat exceptional comfort and ensures it will stay in shape for years to come.

Design elements

30 Combinations
Available in fabric and leather

How to design

1. Choose design 313
2. Choose combination
3. Choose armrest
4. Choose fabric or leather
5. Choose legs

Armrests

Armrest **5-6**

Arm measure:
13cm x 48cm

Armrest **7**

Arm measure:
16cm x 48cm

Armrest **5** **Oak**

Armrest **6** **Walnut**

Legs

Aluminium **101**

Black **103**

Wood Decor Walnut **141**

Wood Decor Oak **142**

Dimensions

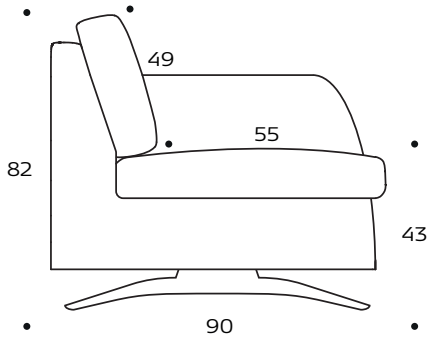

Construction

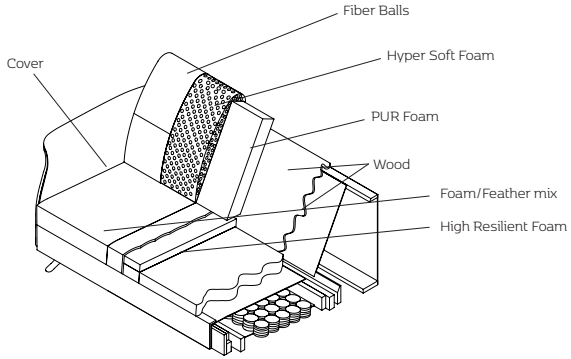

FLEXLUX reserves the right to modify or delete prices, products and product specifications without any prior notice. FLEXLUX has no liability for any errors or omissions in the materials. All weights and measures shown are best approximations. Seams and stitching can vary from fabric to leather.