FLEXLUX

Embrace your Space

Loano sofa

Retail price list

Loano sofa

FLEXLUX
Embrace your Space

2 seater

Shown combination: 2221

Specifications	
Size (WxDxH) cm	174 x 105 x 86
Number of collis	1
CBM collis	1.07692
Weight of collis	

Group	Price
1	€ 1.019,00
2	€ 1.039,00
3	€ 1.119,00
4	€ 1.209,00
Omaha	€ 1.509,00
Dakota	€ 1.579,00
Savoy	€ 2.059,00
Safari	€ 1.829,00
Nature	€ 2.009,00

2.5 seater

Shown combination: 2521

Specifications	
Size (WxDxH) cm	211 x 106 x 85,5
Number of collis	1
CBM collis	1.229956
Weight of collis	

Group	Price
1	€ 1.179,00
2	€ 1.219,00
3	€ 1.279,00
4	€ 1.419,00
Omaha	€ 1.929,00
Dakota	€ 2.009,00
Savoy	€ 2.329,00
Safari	€ 2.289,00
Nature	€ 2.509,00

3 seater

Shown combination: 3221

Specifications	
Size (WxDxH) cm	238 x 105 x 86
Number of collis	1
CBM collis	1.399996
Weight of collis	

Group	Price
1	€ 1.249,00
2	€ 1.269,00
3	€ 1.379,00
4	€ 1.499,00
Omaha	€ 1.869,00
Dakota	€ 1.969,00
Savoy	€ 2.579,00
Safari	€ 2.359,00
Nature	€ 2.579,00

1.5 seater + Chaiselong

Shown combination: 0361
Mirrored combination: 0351

Specifications	
Size (WxDxH) cm	244 x 169 x 85,5
Number of collis	2
CBM collis	1.844388
Weight of collis	

Group	Price
1	€ 1.949,00
2	€ 2.009,00
3	€ 2.079,00
4	€ 2.259,00
Omaha	€ 2.689,00
Dakota	€ 2.799,00
Savoy	€ 3.199,00
Safari	€ 3.469,00
Nature	€ 3.749,00

Prices in €

Loano sofa

FLEXLUX
Embrace your Space

2.5 seater + Chaiselong

Shown combination: 0331
Mirrored combination: 0341

Specifications	
Size (WxDxH) cm	298 x 172 x 85,5
Number of collis	2
CBM collis	2.218476
Weight of collis	

Group	Price
1	€ 2.159,00
2	€ 2.229,00
3	€ 2.319,00
4	€ 2.529,00
Omaha	€ 3.159,00
Dakota	€ 3.289,00
Savoy	€ 3.769,00
Safari	€ 3.919,00
Nature	€ 4.249,00

2 seater + Open end

Shown combination: 0071
Mirrored combination: 0081

Specifications	
Size (WxDxH) cm	230 x 255 x 86
Number of collis	2
CBM collis	2.255864
Weight of collis	

Group	Price
1	€ 2.069,00
2	€ 2.109,00
3	€ 2.279,00
4	€ 2.449,00
Omaha	€ 2.979,00
Dakota	€ 3.119,00
Savoy	€ 4.039,00
Safari	€ 3.669,00
Nature	€ 4.009,00

2.5 seater + Open end

Shown combination: 0311
Mirrored combination: 0321

Specifications	
Size (WxDxH) cm	284 x 229 x 85,5
Number of collis	2
CBM collis	2.4089
Weight of collis	

Group	Price
1	€ 2.219,00
2	€ 2.289,00
3	€ 2.429,00
4	€ 2.649,00
Omaha	€ 3.349,00
Dakota	€ 3.509,00
Savoy	€ 4.319,00
Safari	€ 4.139,00
Nature	€ 4.529,00

3 seater + Open end

Shown combination: 0051
Mirrored combination: 0061

Specifications	
Size (WxDxH) cm	230 x 319 x 86
Number of collis	2
CBM collis	2.57894
Weight of collis	

Group	Price
1	€ 2.299,00
2	€ 2.339,00
3	€ 2.539,00
4	€ 2.729,00
Omaha	€ 3.339,00
Dakota	€ 3.499,00
Savoy	€ 4.579,00
Safari	€ 4.219,00
Nature	€ 4.599,00

Prices in €

Loano sofa

FLEXLUX
Embrace your Space

1.5 seater + Open end + Chaiselong

Shown combination: 0371
Mirrored combination: 0381

Specifications	
Size (WxDxH) cm	319 x 231 x 85,5
Number of collis	3
CBM collis	3.029
Weight of collis	

Group	Price
1	€ 2.949,00
2	€ 3.009,00
3	€ 3.179,00
4	€ 3.429,00
Omaha	€ 4.119,00
Dakota	€ 4.299,00
Savoy	€ 5.199,00
Safari	€ 5.249,00
Nature	€ 5.189,00

Footrest

Shown combination: 1760

Specifications	
Size (WxDxH) cm	
Number of collis	0
CBM collis	0
Weight of collis	

Group	Price
1	€ 399,00
2	€ 409,00
3	€ 419,00
4	€ 439,00
Omaha	€ 499,00
Dakota	€ 509,00
Savoy	€ 599,00
Safari	€ 639,00
Nature	€ 639,00

Footrest

Shown combination: 1720

Specifications	
Size (WxDxH) cm	
Number of collis	0
CBM collis	0
Weight of collis	

Group	Price
1	€ 399,00
2	€ 409,00
3	€ 419,00
4	€ 439,00
Omaha	€ 499,00
Dakota	€ 509,00
Savoy	€ 599,00
Safari	€ 639,00
Nature	€ 639,00

Neckrest

Shown combination: 1055

Specifications	
Size (WxDxH) cm	
Number of collis	0
CBM collis	0
Weight of collis	

Group	Price
1	€ 89,00
2	€ 99,00
3	€ 99,00
4	€ 99,00
Omaha	€ 119,00
Dakota	€ 129,00
Savoy	€ 169,00
Safari	€ 169,00
Nature	€ 169,00

Prices in €

Specifications of Loano

Loano is a light weight sofa with high comfort and beautiful design details. The loose cushions gives a soft and pleasant look. The iconic stitching on the seat and a perfect sloping arm makes Loano one of a kind. The legs are 21 cm and available in brushed steel or Black steel.

Design elements

9 Combinations
Available in fabric and leather

How to design

1. Choose design 153
2. Choose combination
3. Choose fabric or leather
4. Choose legs

Legs

Brushed Steel **020**
H: 21 cm

Black Steel **040**
H: 21 cm

Dimensions

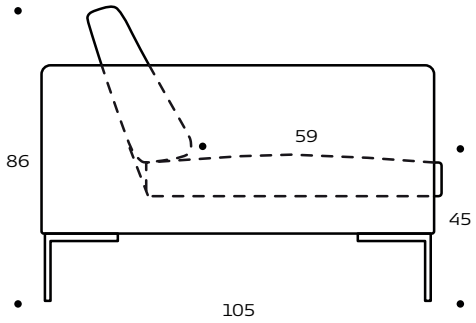

Construction

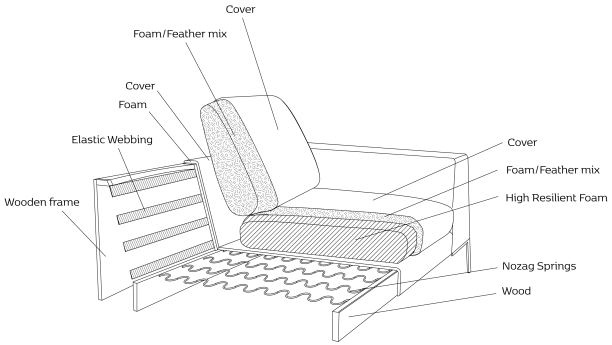

FLEXLUX reserves the right to modify or delete prices, products and product specifications without any prior notice. FLEXLUX has no liability for any errors or omissions in the materials. All weights and measures shown are best approximations. Seams and stitching can vary from fabric to leather.